NOTRE DAME UNIVERSITY

BANGLADESH

EEE Lab Report-05

Course Title: Electrical Circuit Analysis Lab

Course Code: EEE-2108

Experiment No: 05

Name of the Experiment: Diode Rectifier Circuits

Date of Experiment: 17-08-23

Date of Submission: 24-08-23

Submitted by:

Group: E

Name: Istiak Alam

ID: 0692230005101005

Batch: CSE-20

Submitted To:

Dhiman Roy

Lecturer, NDUB

Experiment No:05

Name of Experiment: Diode Rectifier Circuits.

Theory: Because of their ability to conduct current in One direction & block current in the other direction, diodes are used in circuits called rectifiers that convert AC signal into DC signal. Rectifiers are found in all DC Power supplies that operate from an AC voltage source. A power supply is an essential part of each electronic system from the simplest to the most complex. From the characteristic curve of a diode, we observe that it allows the current to flow when it is in the forward bias only. In the reverse bias it remains open. So, when an alternating voltage is applied across a diode it allows only the half-cycle during its forward bias condition, other half cycle will be clipped of.

In the output the load will get DC signal. Diode rectifier can be catagorized in two major types.

They are -

1. Half-wave rectifier
2. Full-wave rectifier

Equipments & Components:

1. P-N junction diode - 4 pieces
2. Resistor 1Ω - 1 piece
3. Capacitor $0.1\mu F$ - 1 piece
4. Signal generator
5. Trainer board
6. Digital Storage Oscilloscope.
7. Digital multimeter
8. Wire & Jumpers.

Procedures:

1. Connect the circuit in breadboard as shown in figure 5.3 without capacitor.

2. Observe the output & input voltage in the oscilloscope.

3. Connect the 0.1μF capacitor & repeat step 2.

4. Connect the circuit in breadboard as shown in figure 5.1 without capacitor.

5. Connect the oscilloscope's channel 1 in input & channel 2 in output.

6. Observe the output & input voltage in the oscilloscope.

7. Vary the frequencies at 1kHz, 5kHz, 10kHz & observe the input & output voltage in the oscilloscope.

The input & output waveshapes are as follows -

Full Wave Bridge Rectifier Circuit & Graph:

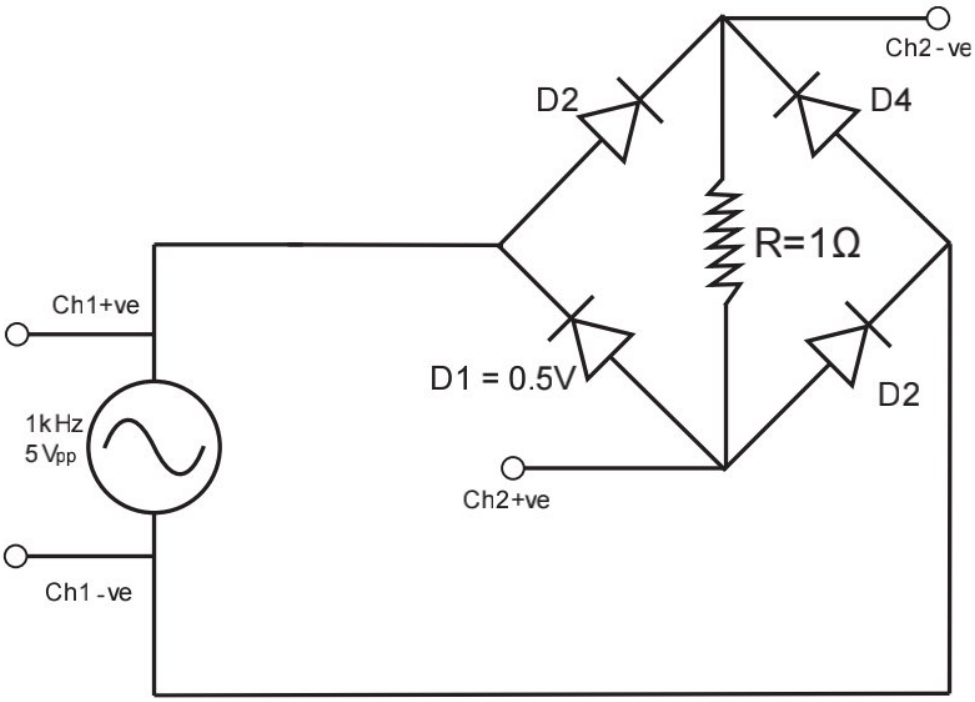

Fig 5.1: Full Wave Bridge Rectifier Circuit

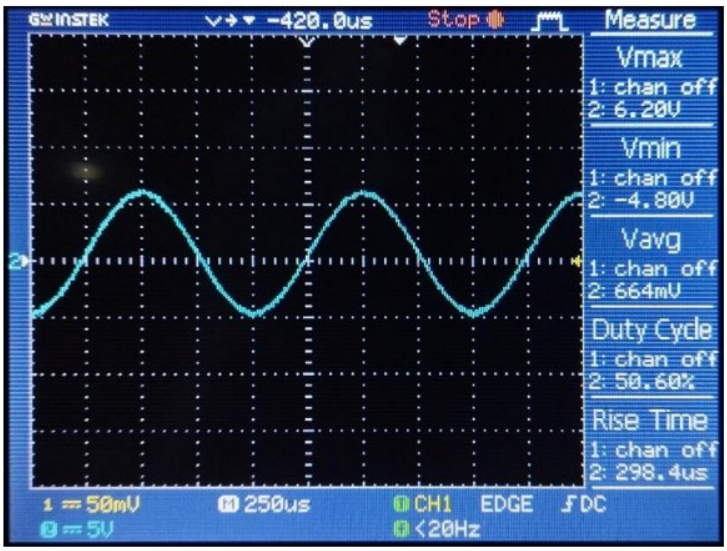

Input Signal

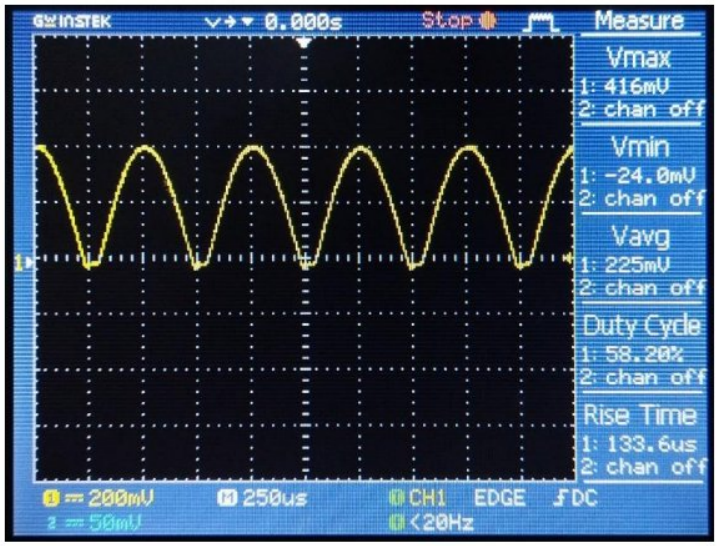

Output Signal

Fig 5.2: Full Wave Bridge Rectifier Wave shape

Half Wave Rectifier Circuit & Graph:

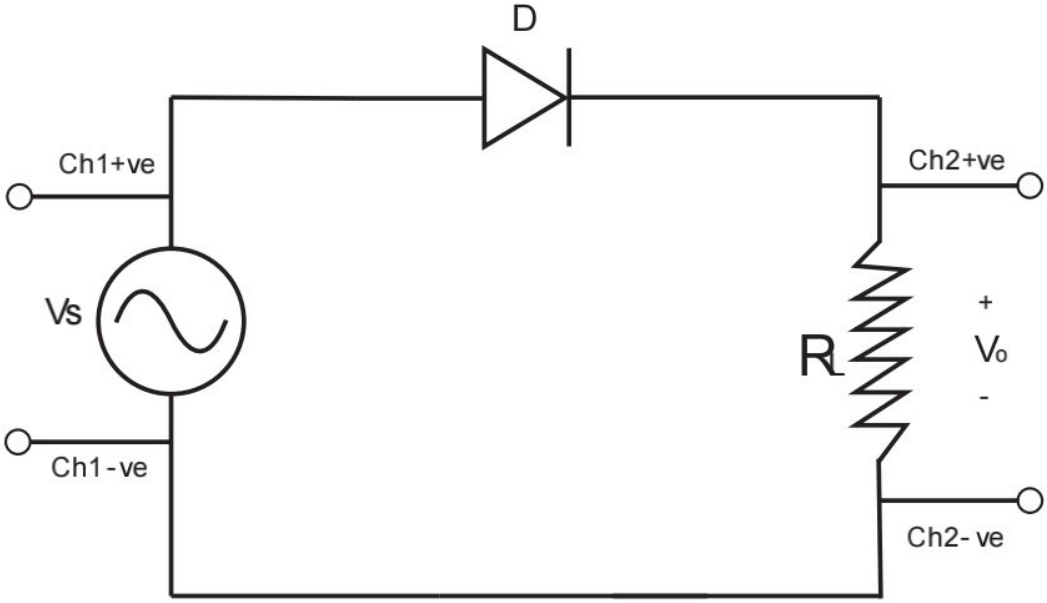

Fig 5.3: Half Wave Rectifier Circuit

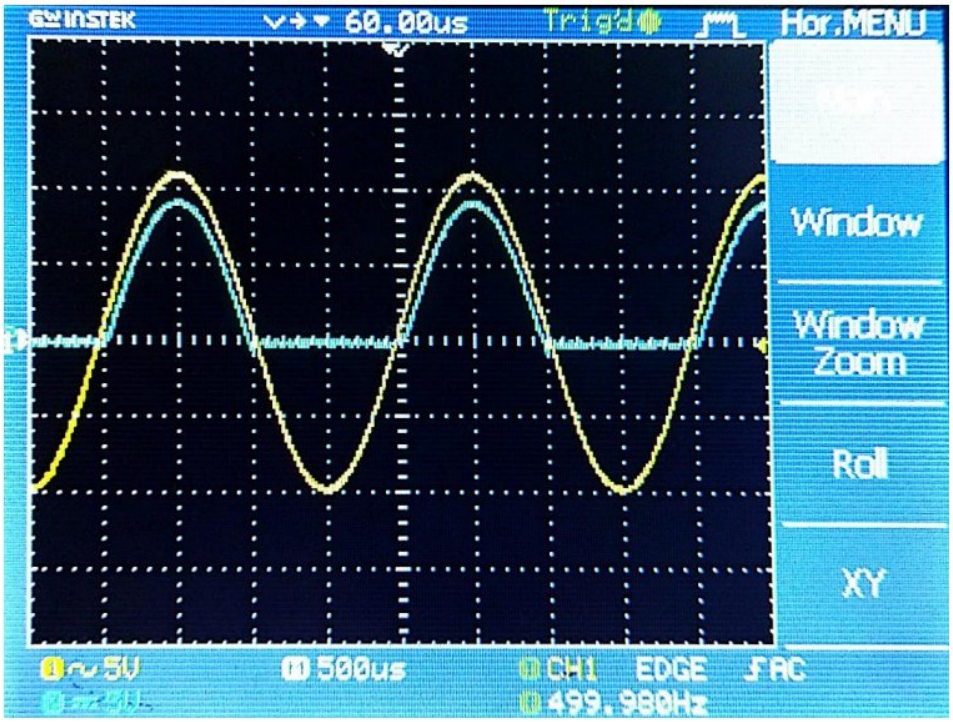

Fig 5.4: Half Wave Rectifier Input & Output Signal Wave shape

Discussion:

1. Calibrate the oscilloscope for accuracy.
2. Use perfect frequency, voltage & current
3. Be careful with reverse voltage to prevent damage.
4. Measure voltage in parallel & when measuring current short the circuit
5. Careful with connecting the channel of oscilloscope to the circuits.
6. Avoid overloading & short circuit.
7. Follow ~~guidl~~ guidelines & manual.